MIT | Academy of Engineering

(An Autonomous Institute Affiliated to Savitribai Phule Pune University)

Project TITLE (Write project title)

DIGITAL ELECTRONICS ENGINEERING LABORATORY [2307103L]

FY B.Tech. (SEM I)

SUBMITTED BY

Name of Student-1 = **ONKAR KALKUTE** [PRN] = **202501040179**
Name of Student-2 = **AKANKSHA KATKAR** [PRN] = **202501040183**
Name of Student-3 = **OMKAR AKUL** [PRN] = **202501040170**
Name of Student-4 = **SRUSHTI DANGE** [PRN] = **202501040173**

COURSE TEACHER

(Vinayak Kulkarni)

DEPARTMENT OF ELECTRONICS AND TELECOMMUNICATION ENGINEERING, MIT ACADEMY OF ENGINEERING, ALANDI (D), PUNE-412105 MAHARASHTRA (INDIA)

Project

DIY Secret Code Lock Circuit

Introduction

1] Motivation for the project :-

- **Security:** Provide a low-cost, hardware-only door lock without microcontrollers.
- **Education:** Demonstrate core digital logic concepts (XOR comparison, NOR comparison, reduction, De Morgan's transformations).
- **Practicality:** Simple component availability and 5 V operation suitable for academic labs.

2] Problem Statement :-

- **Goal:** Design and validate a 4-bit lock that unlocks only when an entered 4-bit code exactly matches the set 4-bit code and the Enter button is pressed.
- **Constraints:** Operate at +5 V, avoid floating inputs, provide clear user feedback (LEDs), and safely drive an inductive lock.

3] Conceptual Sketches of Problem :-

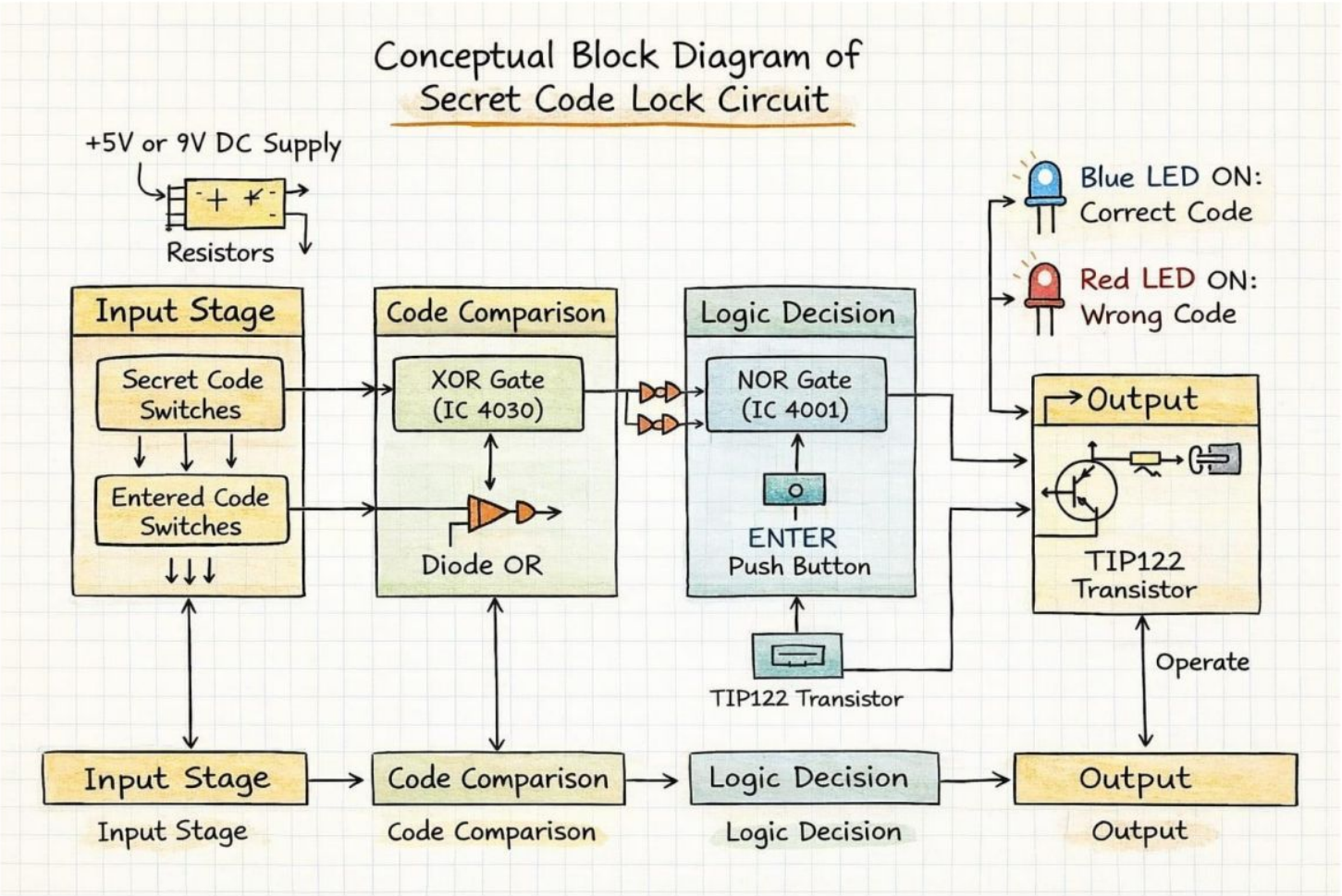

Operation of Project

1] Block Diagram :-

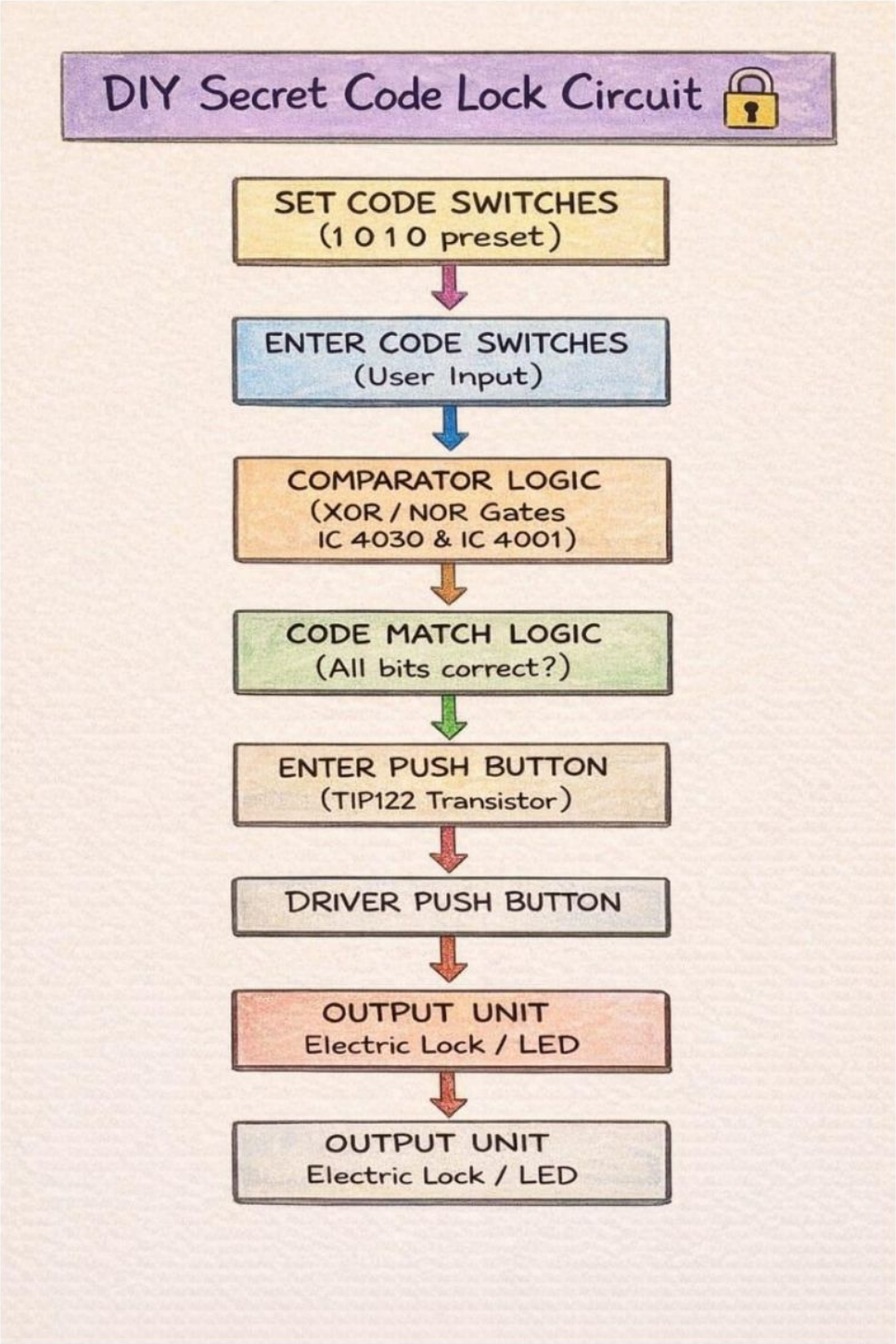

2] Working (Step by Step) :-

- The secret code and entered code are applied to the XOR gates of IC 4070.
- If both bits are the same, the XOR output is LOW; if different, the output becomes HIGH.
- All XOR outputs are combined and applied to a NOR gate (IC 4001).
- When all bits match, the NOR output becomes HIGH, turning ON the blue LED and activating the TIP122 transistor to operate the electric lock.
- If any bit is wrong, the NOR output remains LOW, the red LED glows, and the lock stays closed.

3] Bill of Material :-

- **Integrated Circuits :-** 1} IC 4070 – XOR Gate (1)
  2} IC 4001 – NOR Gate (1)
- **Semiconductors :-** 1} TIP122 – NPN Darlington Transistor (1)
  2} 1n914/1N4148 - Single Diodes (4)
- **Resistors :-** 1} 10 kohm resistors (8-10) - Pull down and baising
  2} 2.2 kohm resistor (1) - LED current limiting
  3} 470 ohm resistor (1) - LED current limiting
- **Indicators :-** 1} Red LED (1) - Worng code indication
  2} Blue LED (1) - Correct code indication
- **Switches :-** 1} Toggle switches (8)
  * 4 for setting secret code
  * 4 for entering code
  2} Push button switch (1) - ENTER key
- **Output :-** Electric lock
-
- **Power Supply :-** +5 V DC power supply (1)
- **Miscellaneous :-** 1} Connecting wires
  2} Breadboard
  3} IC sockets

Digital System Design

1] Identification of Input and 1]Output variables

- Code Input :- 1) Set Secret Code **(S1, S2, S3, S4)**
  2) Enter Code **(E1, E2, E3, E4)**
  3) Enter Button **(push the button which activates the lock logic)**
- Output Variables :- 1) Red LED **(incorrect code)**
  2) Blue LED **(correct code)**
  3) Electric Lock **(gets unlock when code matches)**

2] Truth table ;-

S1	S2	S3	S4	E1	E2	E3	E4	Y
0	0	0	0	0	0	0	0	1
0	0	0	1	0	0	0	1	1
0	0	1	0	0	0	1	0	1
0	0	1	1	0	0	1	1	1
0	1	0	0	0	1	0	0	1
0	1	0	1	0	1	0	1	1
0	1	1	0	0	1	1	0	1
0	1	1	1	0	1	1	1	1
1	0	0	0	1	0	0	0	1
1	0	0	1	1	0	0	1	1
1	0	1	0	1	0	1	0	1
1	0	1	1	1	0	1	1	1
1	1	0	0	1	1	0	0	1
1	1	1	0	0	0	1	1	1
1	1	1	0	1	1	1	0	1
1	1	1	1	1	1	1	1	1

3] Logic Equation :-

Y = S1’S2’S3’S4’E1’E2’E3’E4’ + S1’S2’S3’S4E1’E2’E3’E4 + S1’S2’S3S4E1’E2’E3E4 + S1’S2’S3S4’E1’E2’E3E4’ + S1’S2S3S4’E1’E2E3EE4’ + S1’S2S3S4E1’E2E3E4 + S1’S2S3’S4E1’E2E3’E4 + S1’S2S3’S4’E1’E2E3’E4’ + S1S2S3’S4’E1E2E3’E4’ + S1S2S3’S4E1E2E3’E4 + S1S2S3S4E1E2E3E4 + S1S2S3S4’E1E2E3E4’ + S1S2’S3S4’E1E2’E3E4’ + S1S2’S3S4E1E2’E3E4 + S1S2’S3’S4E1E2’E3’E4 + S1S2’S3’S4’E1E2’E3’E4’

4] Identification of Min Terms :-

F(S1,S2,S3,S4,E1,E2,E3,E4) =

$\sum m(0,17,51,68,85,102,119,136,153,170,187,204,227,238,255)$

5] K-Map :-

		0000	0001	0011	0010	0110	0111	0101	0100	1100	1101	1111	1110	1010	1011	1001	1000
		S1'S2' S3'S4'	S1'S2' S3'S4	S1'S2' S3S4	S1'S2' S3S4'	S1'S2 S3S4'	S1'S2 S3S4	S1'S2 S3'S4	S1'S2S 3'S4'	S1S2S 3'S4'	S1S2S 3'S4	S1S2 S3S4	S1S2S 3S4'	S1S2' S3S4'	S1S2' S3S4	S1S2' S3'S4	S1S2'S 3'S4'
00 00	E1'E2' E3'E4'	1	0	0	0	0	0	0	0	0	0	0	0	0	0	0	0
00 01	E1'E2' E3'E4	0	1	0	0	0	0	0	0	0	0	0	0	0	0	0	0
00 11	E1'E2' E3E4	0	0	1	0	0	0	0	0	0	0	0	0	0	0	0	0
00 10	E1'E2' E3E4'	0	0	0	1	0	0	0	0	0	0	0	0	0	0	0	0
01 10	E1'E2E 3E4'	0	0	0	0	1	0	0	0	0	0	0	0	0	0	0	0
01 11	E1'E2E 3E4	0	0	0	0	0	1	0	0	0	0	0	0	0	0	0	0
01 01	E1'E2E 3'E4	0	0	0	0	0	0	1	0	0	0	0	0	0	0	0	0
01 00	E1'E2E 3'E4'	0	0	0	0	0	0	0	1	0	0	0	0	0	0	0	0
11 00	E1E2E 3'E4'	0	0	0	0	0	0	0	0	1	0	0	0	0	0	0	0
11 01	E1E2E 3'E4	0	0	0	0	0	0	0	0	0	1	0	0	0	0	0	0
11 11	E1E2E 3E4	0	0	0	0	0	0	0	0	0	0	1	0	0	0	0	0
11 10	E1E2E 3E4'	0	0	0	0	0	0	0	0	0	0	0	1	0	0	0	0
10 10	E1E2'E 3E4'	0	0	0	0	0	0	0	0	0	0	0	0	1	0	0	0
10 11	E1E2'E 3E4	0	0	0	0	0	0	0	0	0	0	0	0	0	1	0	0
10 01	E1E2'E 3'E4	0	0	0	0	0	0	0	0	0	0	0	0	0	0	1	0
10 00	E1E2'E 3'E4'	0	0	0	0	0	0	0	0	0	0	0	0	0	0	0	1

6] Step by Step Simplification of Logic Equation :-

Y = S1'S2'S3'S4'E1'E2'E3'E4' + S1'S2'S3'S4E1'E2'E3'E4 + S1'S2'S3S4E1'E2'E3E4 + S1'S2'S3S4'E1'E2'E3E4'
+ S1'S2S3S4'E1'E2E3EE4' + S1'S2S3S4E1'E2E3E4 + S1'S2S3'S4E1'E2E3'E4 + S1'S2S3'S4'E1'E2E3'E4'
+ S1S2S3'S4'E1E2E3'E4' + S1S2S3'S4E1E2E3'E4 + S1S2S3S4E1E2E3E4 + S1S2S3S4'E1E2E3E4' +
S1S2'S3S4'E1E2'E3E4' + S1S2'S3S4E1E2'E3E4 + S1S2'S3'S4E1E2'E3'E4 + S1S2'S3'S4'E1E2'E3'E4'

Y = (S4'E4' + S4E4)(S1'S2'S3'E1'E2'E3' + S1'S2'S3E1'E2'E3 + S1'S2S3E1'E2E3 + S1'S2S3'E1'E2E3'

+ S1S2S3'E1E2E3' + S1S2'S3E1E2'E3 + S1S2'S3'E1E2'E3')

Y = (S4'E4' + S4E4)(S3'E3' + S3E3)(S1'S2'E1'E2' + S1'S2E1'E2 + S1S2E1E2 + S1S2'E1E2')

Y = (S4'E4' + S4E4)(S3'E3' + S3E3)(S2'E2' + S2E2)(S1'E1' + S1E1)

7] Logic Circuit Diagram :-

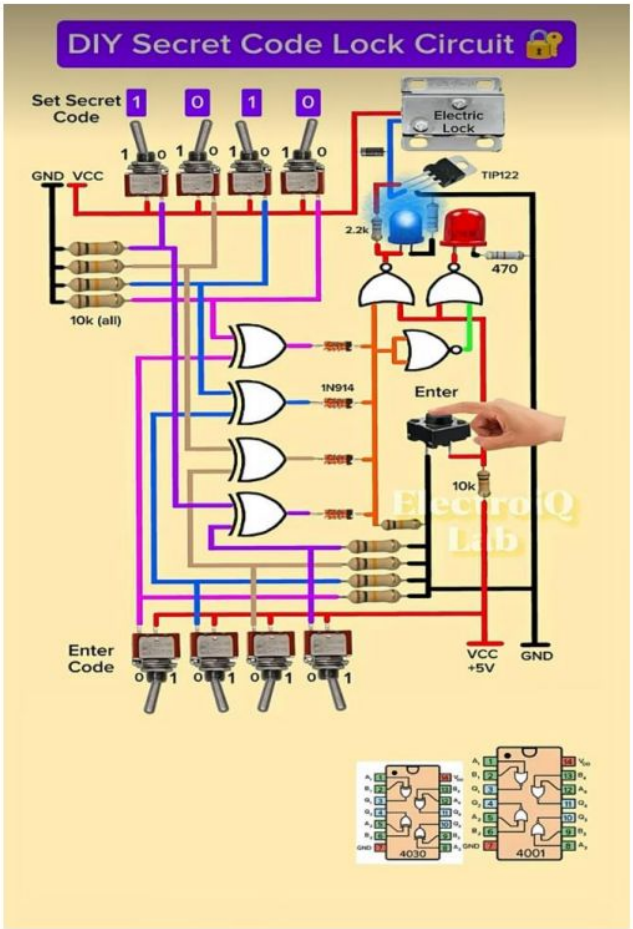

8] Selectoin of ICs (Pin Diagram)

4070 IC

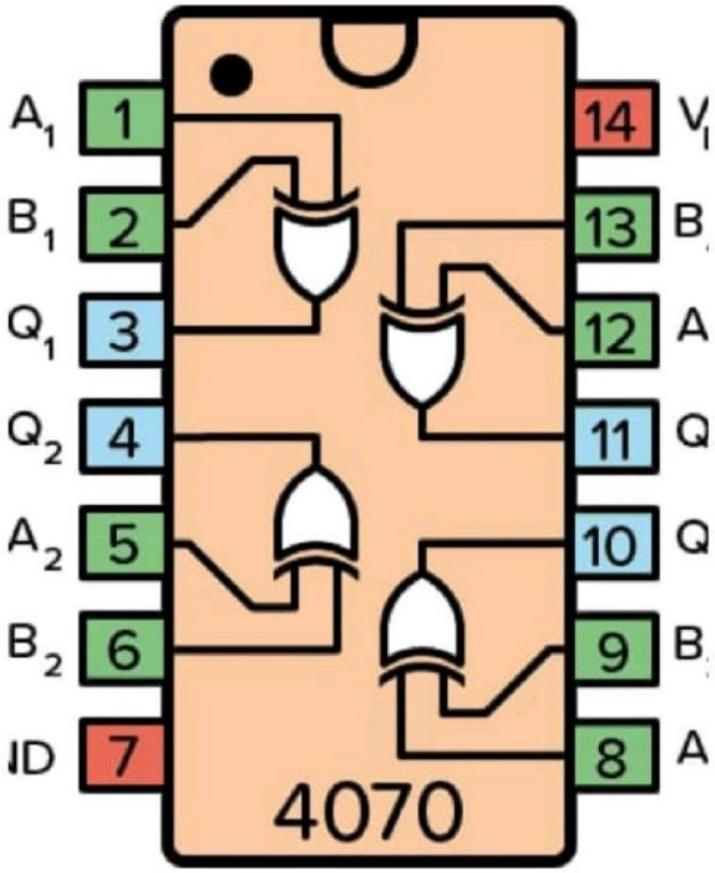

4001 IC

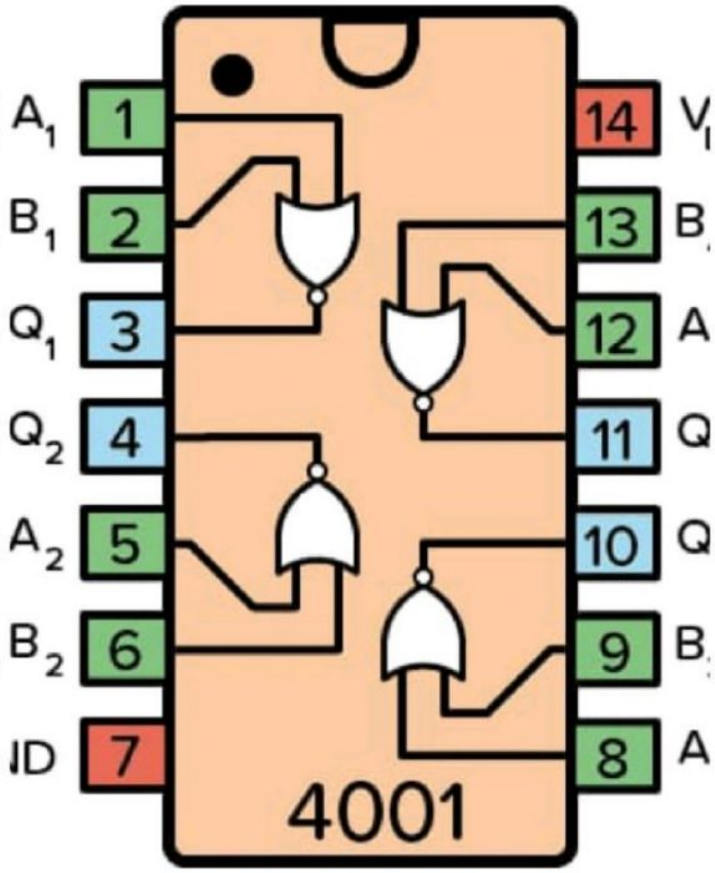

Simulation (Results of All Conditions)

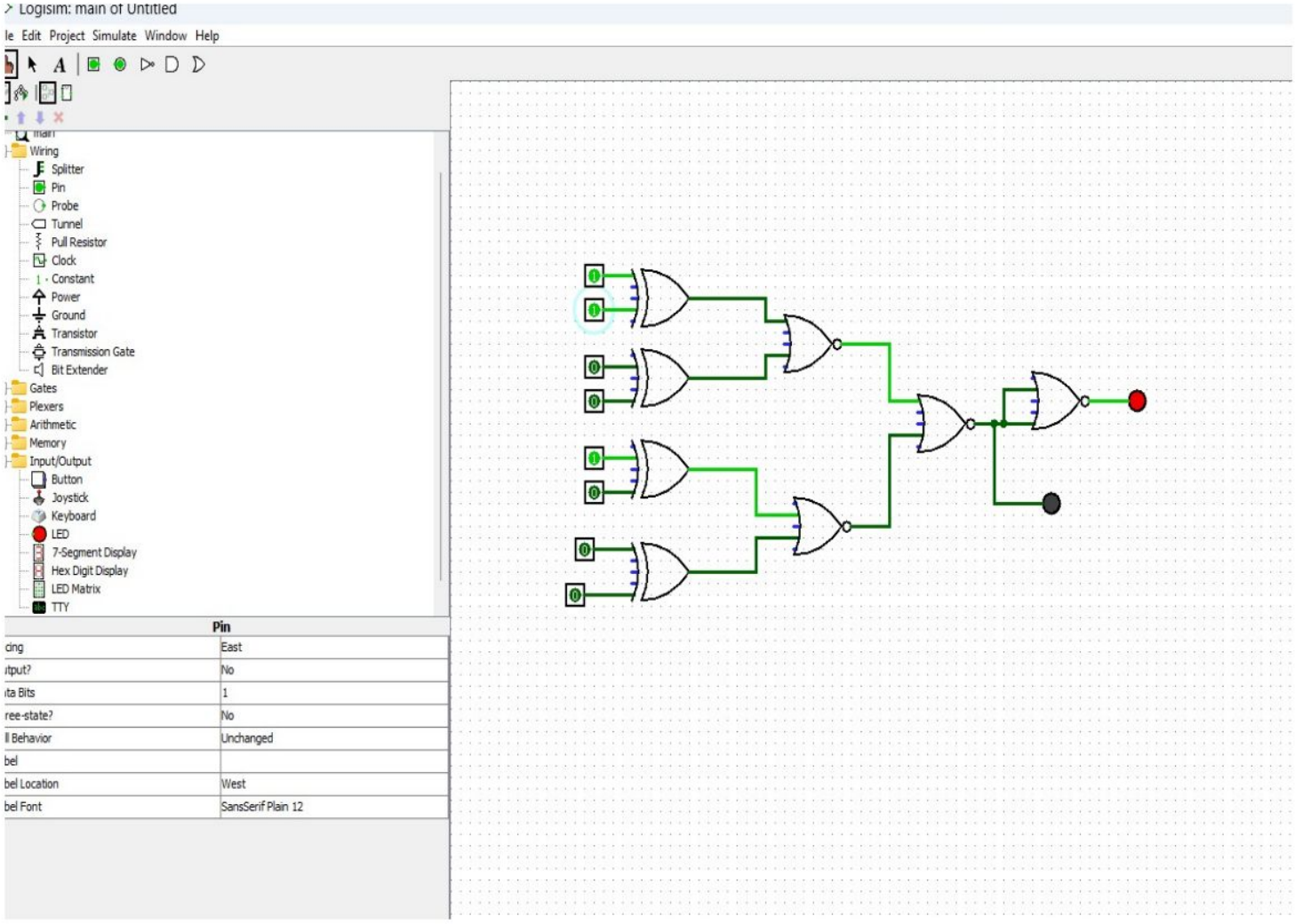

Implementation and Results

1] Verification by Results Table :-

Set Code	Enter Code	Enter Pressed	XOR	Mis Match	Match	UNLOCK_LOGIC	Red LED	Blue LED	Lock	Alarm
1010	1010	1	0000	0	1	1	OFF	ON	ON	OFF
1010	0101	1	1111	1	0	0	ON	OFF	OFF	ON
0000	0000	1	0000	0	1	1	OFF	ON	ON	OFF
1111	0000	1	1111	1	0	0	ON	OFF	OFF	ON
1010	1010	0	0000	0	1	0	OFF	OFF	OFF	OFF
0110	0111	1	0001	1	0	0	ON	OFF	OFF	ON
1100	1100	1	0000	0	1	1	OFF	ON	ON	OFF
1001	1001	0	0000	0	1	0	OFF	OFF	OFF	OFF
0011	0010	1	0001	1	0	0	ON	OFF	OFF	ON

2] Calculations :-

Current through IC input (9 V with 10 kΩ)
This is for pull-down / pull-up resistors connected to IC inputs.
Given:

- Voltage = 9 V
- Resistance = 10 kohm
- Formula:
  I= V/R
- Calculation:
  =9/10000
  = 0.9mA

☒ LED Current Calculation (9 V, 10 kΩ + 470 Ω)

This is for LED indication circuit.

Given:

- Supply voltage = 9 V
- LED forward voltage ≈ 2 V
- Resistors in series: 10 kohm + 470 ohm = 10470 ohm
- Voltage across resistor:
  V = 9 − 2 = 7 V
- Current:
  I = 7/10470
  I = 0.00067 A
  I = O.67 mA

☒ LED Current (Only 470 Ω with 9 V)

Given:

- V = 9 V
- LED drop ≈ 2 V
- R = 470 ohm
- Voltage across resistor:
  Vr = 9 −2
  = 7 V
- Current:
  I = 7/470
  I = 15 mA

☐ Base Current of TIP122 (10 kΩ base resistor)

Given:

- Base voltage ≈ 0.7 V
- Supply = 9 V
- Base resistor = 10 kΩ
- Voltage across resistor:
  V = 9 −0.7
  = 8.3 V
- Base current:
  I = 8.3 /10000
  I = 0.83 mA

☐ Power Dissipation Check (Resistor Safety)

For 470 Ω resistor:

P = I^2R
P = (0.015)^2 *470
P = 0.105 W

Summary

- IC input current ≈ 0.9 mA
- LED current with 10 kΩ + 470 Ω ≈ 0.67 mA
- LED current with 470 Ω ≈ 15 mA
- TIP122 base current ≈ 0.83 mA

All components operate within safe limits

3] Graph Analysis :-

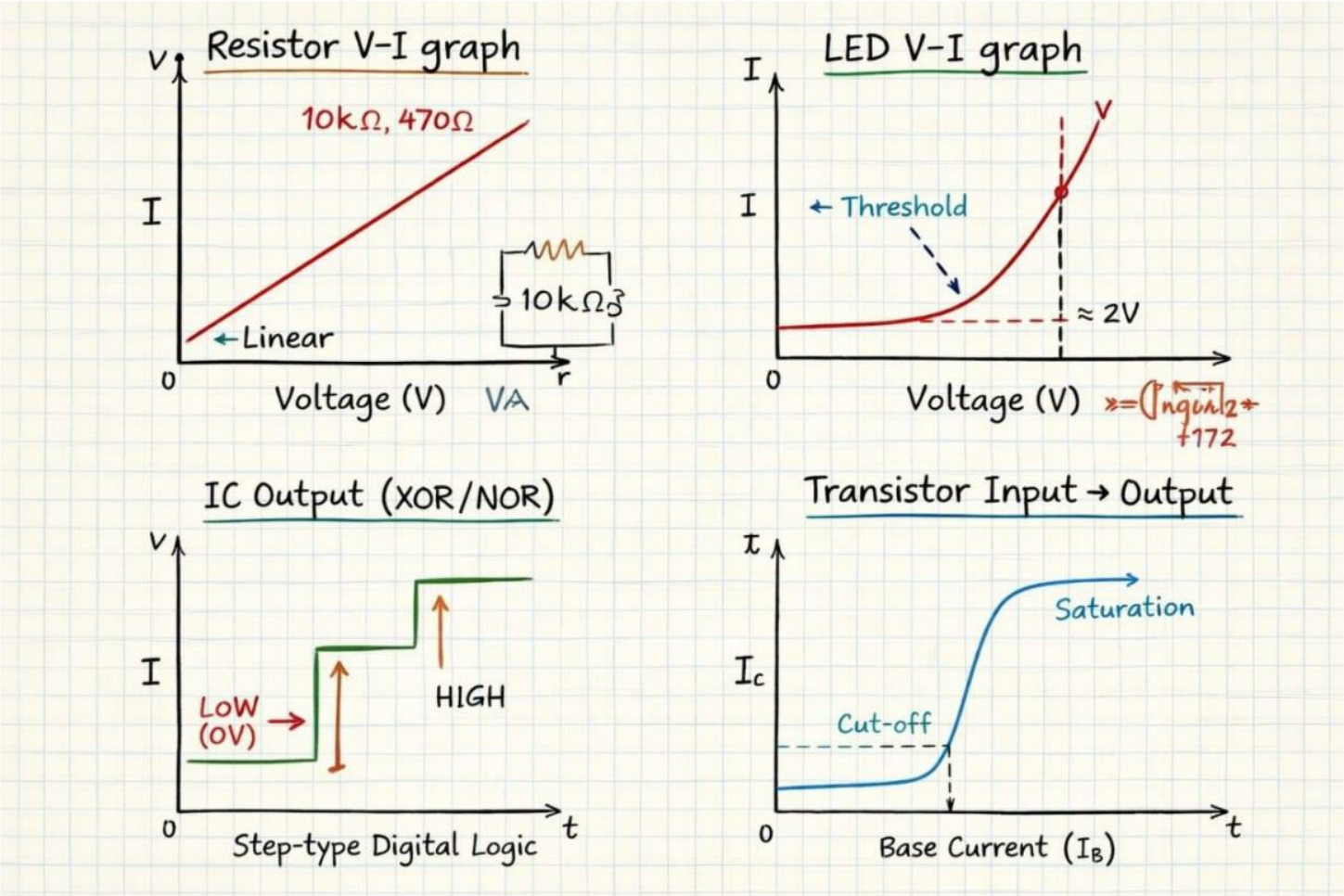

4] Waveform Analysis :-

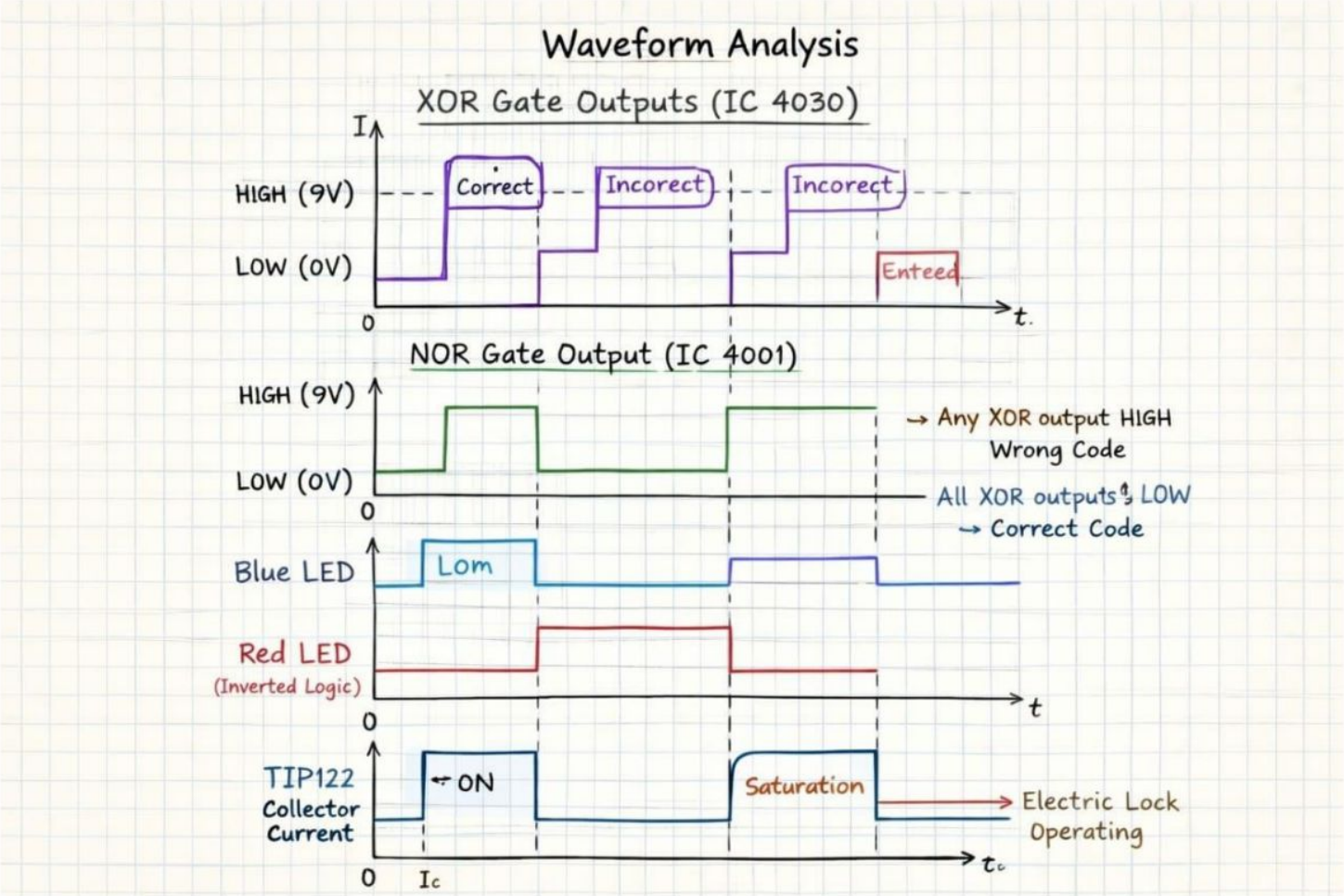

OFFOFF 1

5] Photographs of all conditions of results :-

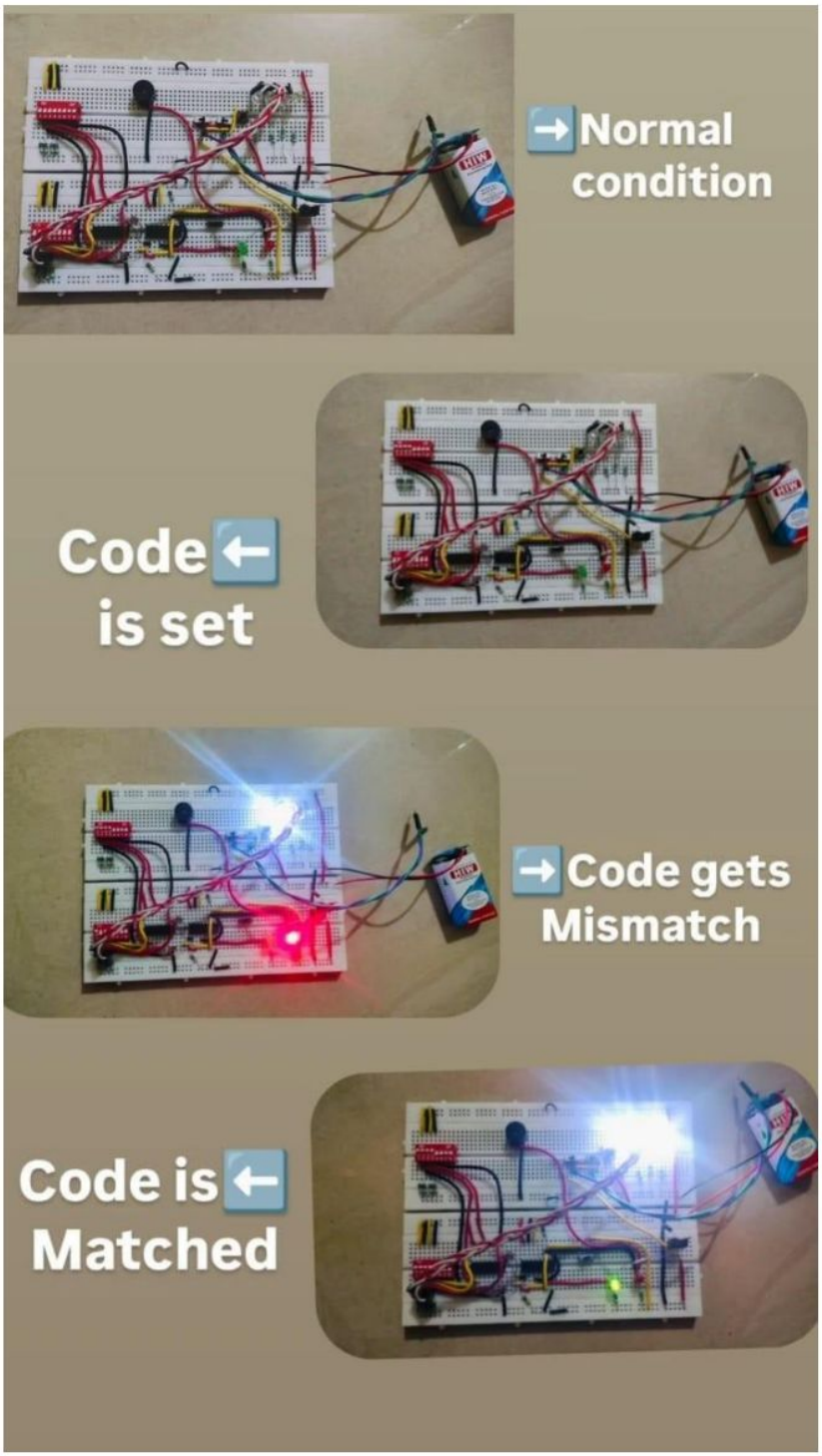

6] Conclusion and Future scope :-

CONCLUSION

In this experiment, a Secret Code Lock Circuit was designed and implemented using basic digital logic ICs. The circuit operates by comparing a preset binary code with the user-entered code using XOR and NOR logic gates. When both codes match exactly, the control signal activates the output stage, allowing the lock to open; otherwise, the lock remains closed.

The experiment successfully demonstrates the practical application of digital logic concepts, including code comparison, logic gate operation, resistor biasing, and transistor switching. The system provides a simple, reliable, and cost-effective security solution, making it suitable for educational and basic security applications. Thus, the objectives of the experiment were achieved successfully.

FUTURE SCOPE

The functionality of the Secret Code Lock Circuit can be extended in the following ways:

Replacement of DIP switches with a keypad for user-friendly input.

Use of a microcontroller to minimize hardware components and improve flexibility.

Integration of biometric or RFID authentication for enhanced security.

Addition of an alarm or buzzer to indicate multiple incorrect attempts.

Implementation of IoT connectivity for remote monitoring and control.

With these enhancements, the system can be adapted for real-world security applications such as electronic door locks, lockers, and access control systems.